Television principles

Television is based on the ability of the eye to perceive motion by representation of movement by a sequence of still frames at such a rate that there is no apparent discontinuity between them. In principle, the requirements of a TV camera are to detect colour faithfully, brightness, and picture geometry. There are problems with all of these, due to technical restrictions and device imperfections. A TV picture is formed from lines and frames, the latter being subdivided into fields. These fields are alternate lines in each frame, two of which make a complete frame:

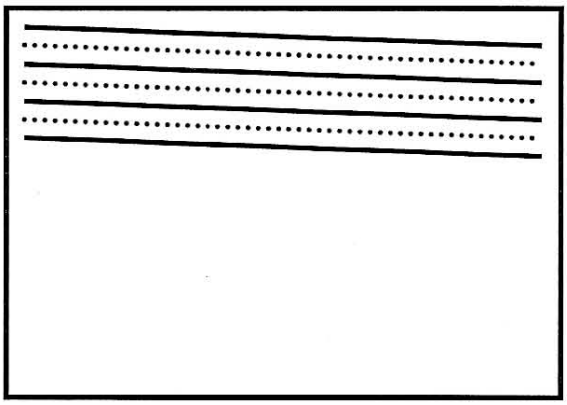

Field 1 = ———

Field 2 = ·····

Both CCD's and vacuum tube sensors for camera application provide an electrical charge which is proportional to the amount of light which is admitted to them. One of the fundamental restrictions to a camera having a wide dynamic range is the noise. In many electronic systems, this inherent noise is proportional to the bandwidth, but in vacuum tube sensor systems, such as surveillance video, it is much more severely related to bandwidth. In this case, the noise is proportional to the $(\text{bandwidth})^3$:-

$N = k \times (B)^3$; k is a constant, B = Bandwidth, and N = Noise power.

Consequently, the 'Quality' of a video system degrades rapidly when the bandwidth is increased. Suppose standard TV is compared with a typical HDTV (High-Definition TV) system, from this point of view. The bandwidth of the former is about 5 MHz, the latter may be as much as 15 MHz. Therefore the sensitivity of an HDTV camera can be as low as :-

$(5/15)^3 = [1/27]$ that of a standard TV camera.

'Quality', in terms of numbers, is harder to define, but in terms of noise, is lower for a HDTV camera than a standard one. The most important restriction to quality, because of noise, occurs at the point in the camera electronics just after the sensor :-

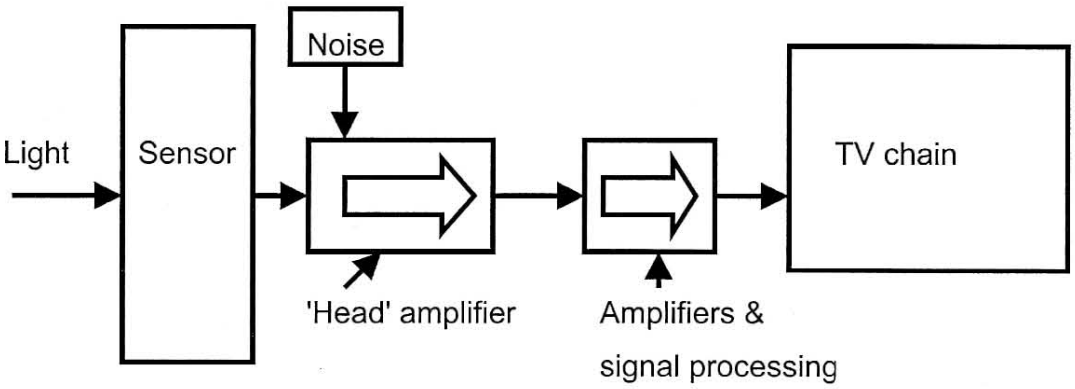

The consequence of this head amplifier noise is that it is amplified in a different way to picture information. In a typical standard TV system, there may be more than 600 pixels along a scanning line. Information contained within a single pixel is likely to be corrupted by the head amplifier noise.

Noise appears as a random fluctuation of brightness and colour, both spatially and in time, ie. coloured, scintillating 'snow'.

The exact visible nature of this noise depends on whether a monochrome or colour display is used. In either case, there are two basic components ie. luminosity (or brightness) noise, and chromaticity (or colour) noise. Noise may be objectively assessed by measuring instruments, or subjectively. The latter is difficult, due to the variability of the human observer ('expert', or 'non-expert' viewers, colour vision defects, material being assessed, etc). For objective measurements, a 'noise-weighting' characteristic is used, because the sensitivity of the human observer to the visual effects of noise may be partially simulated :-

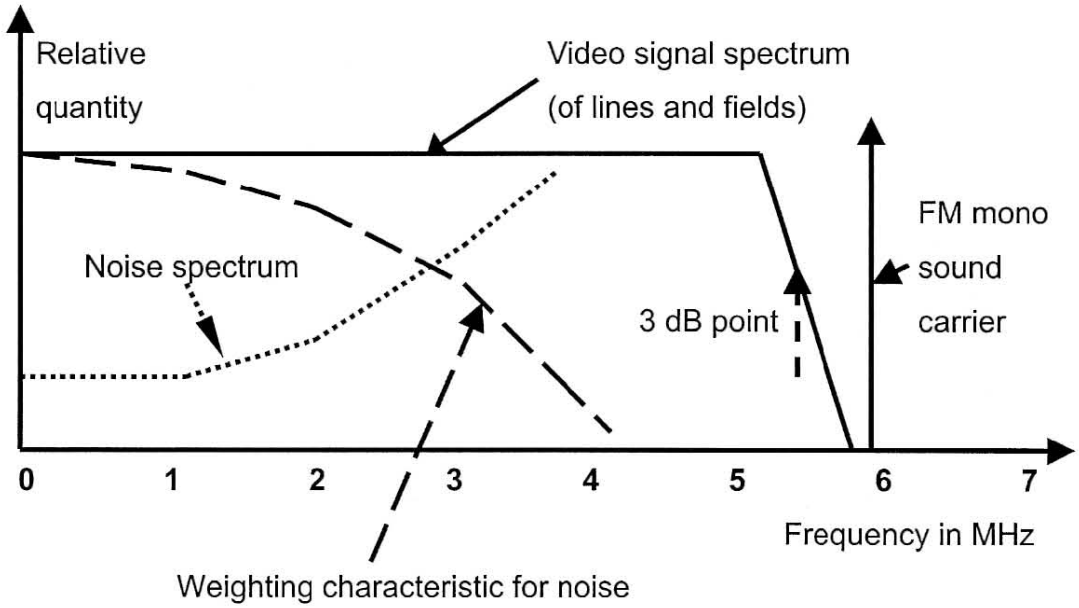

The weighting characteristic gives a decreasing emphasis to high frequency noise. This is because the eye does not detect high frequency information of any kind as easily as low frequencies.

The latter correspond to large features on the screen, which are more easily seen than the small ones corresponding to high frequency noise. Once the signal has been acquired, it is subjected to several forms of signal processing.

[a] Further amplification.
[b] Aperture correction.
[c] Colour correction.
[d] Gamma correction.

[a] This process converts a small signal current (less than 300 nA) into a voltage (less than 700 mV). The process is accompanied by the noise discussed above.

[b] Aperture correction derives edge-enhancing signals so that the picture appears sharper. Mathematically, this is equivalent to a form of differentiation, where the differentiated signal is added back to the original in controlled amounts.

[c] Colour correctors compensate for discrepancies in the overall colour response of the TV camera. They simulate a colour response which more closely follows the required response, over the wavelength range of interest :-

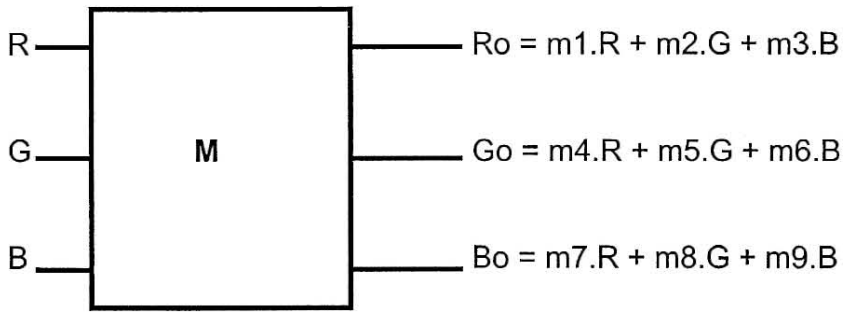

The 'm' factors have values between -2 and +2, typically, for example, m1= 1.5, m2= -0.3, and m3= -0.2. Note that (m1 + m2 + m3) = 1, and this applies for the other rows of 'm' values.

[d] Gamma correction is necessary in order to obtain a linear relationship between light input to the camera, and light output from the display device,

usually a cathode ray tube. The relationship between light out and input electrical signal is of the form :-

$Lo = K.V^{\gamma}$: where K = a constant

γ = exponent, and

Lo = light output : V = input voltage to CRT

This characteristic appears as below :-

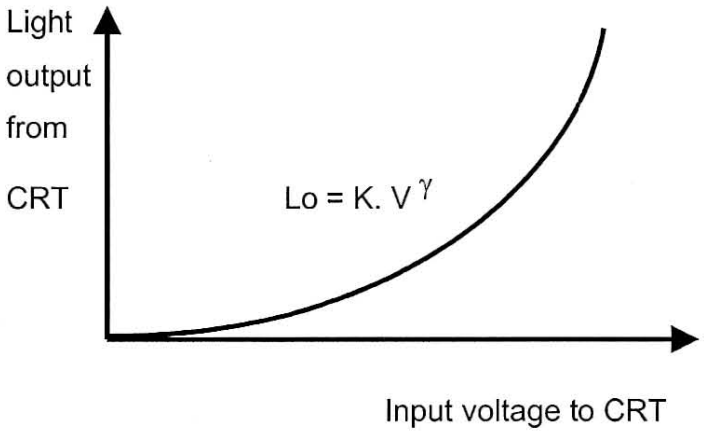

Gamma correction implies developing a complementary characteristic :-

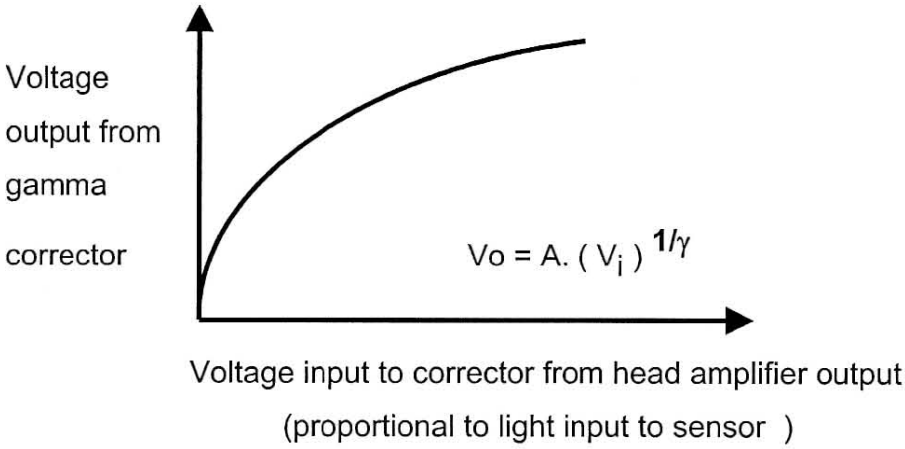

From the gamma corrector :- $\mathbf{Vo} = \mathbf{A.\ (V_i)^{1/\gamma}}$

From the CRT :- $\mathbf{Lo} = \mathbf{K.\ V^{\gamma}}$

Therefore, the overall effect is observed by setting V = Vo . The input voltage to the gamma corrector is proportional to the level of light going into the head amplifier. Let V_{01} be the output of the head amplifier, so $V_{01} = \beta \times Li$, where β is a constant.

Thus : $\mathbf{V_{01}}$ (from head amp) $= \mathbf{V_i}$ (to gamma corrector)

For the overall effect, $\mathbf{Lo} = \mathbf{K.\ V^{\gamma}} = \mathbf{K.\ (A.[Vi^{1/\gamma}])^{\gamma}}$

$= \mathbf{(K.\ A^{\gamma}).Vi}$

Thus $\mathbf{Lo} = \mathbf{(K.\ A^{\gamma}).\ \beta\ .Li} = \mathbf{D.\ Li}$,

where $\mathbf{D = (K.\ A^{\gamma})\ \beta}$ which is a collection of constants. Thus, the light output, **Lo**, is a constant multiple of the light input, **Li** , when gamma correction is used.

A television signal consists of two basic elements, being firstly the luminance signal, which is an electronic equivalent to the brightness characteristic of human vision. It is given greatest priority in the whole TV chain. Secondly, colour aspects necessitate the generation of low resolution (restricted bandwidth) chrominance signals. Let the luminance signal be designated as Y', where :-

$$\mathbf{Y' = l_1.R' + l_2.G' + l_3.B'} \quad : \quad \mathbf{R' = R^{1/\gamma}\text{, etc.}}$$

The colour-difference signals are :-

(B'-Y') **and** **(R'-Y')**

I_1, I_2, and I_3 are the luminosity coefficients, having values 0.299, 0.587, and 0.114. The chrominance signals are weighted forms of the colour-difference signals, to ensure no overmodulation of the RF carrier (usually in the 400 MHz to 900 MHz region). The concept of a composite colour signal is to mix a low resolution colour image with a high resolution monochrome image (the luminance) for backwards compatibility i.e. a monochrome receiver can still make use of a colour signal and display a reasonable quality of monochrome image.

Monochrome television produces a picture signal at 25 full frames (50 fields) per second, with 625 lines, 580 or so of that are visible, or 'active'. Colour TV has to perform the same task with three independent brightness signals, ie. Red, Green, and Blue. Initially this suggests that three channels would be necessary, or 3 times the bandwidth. Fortunately, advantage may be taken of the deficiencies of human vision. A highly detailed luminance (brightness) signal may be sent along with low resolution colouring signals. Simple relationships, as follows, may be used :-

[1] Luminance $\mathbf{(Y) = I_1.R + I_2.G + I_3.B}$, is the *true luminance*,

whereas $\mathbf{Y' = I_1.R' + I_2.G' + I_3.B'}$ is the *transmitted luminance*.

[2] Colour-difference signals **(R'-Y')**, and **(B'-Y')**,

where $\mathbf{R' = (R)^{1/\gamma}}$, etc, for which $\gamma = \mathbf{2.2}$

The colour-difference signals are scaled in magnitude, and used to modulate the strength of a colour subcarrier (fsc) at 4.43361875 MHz (plus or minus 1 Hz).

This precise frequency is chosen for the UK PAL system to minimise visible interference on both colour and monochrome screens due to the way it is carried. The colour-difference signals are then referred to as the *chrominance signals*.

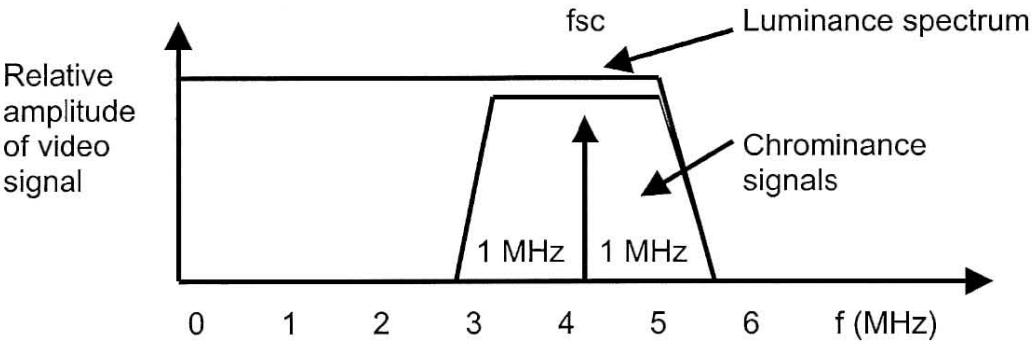

When a TV signal is generated, it produces components at line frequency (15,625 Hz), field frequency (50 Hz), and frame frequency (25 Hz), and multiples and combinations of these, eg.

15,625 31,250 ..... plus

(15,625 ± 25), (15,625 ± 50), etc , plus

25, 50, 75, 100, ... etc

What this means is that the spectrum of a video signal has gaps in it :-

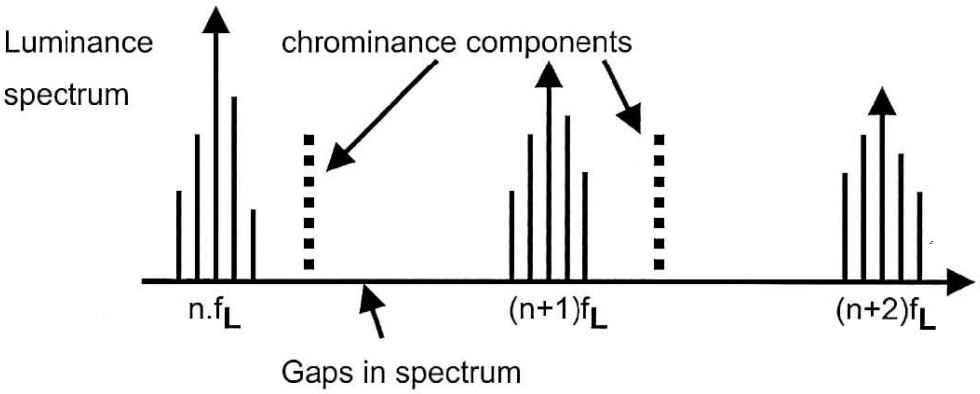

The subcarrier frequency, **fsc** is precisely defined so that the chrominance (colour-difference) frequency components are set up in the gaps between line-, field-, and frame frequency components. This is called *frequency interleaving*.

The colour-difference signals contain hue, saturation, and brightness information. They are converted to chrominance signals by the process of *subcarrier modulation*. In the process of modulation, the amplitude of the subcarrier (at 4.43 MHz in the UK P.A.L. system) is varied in sympathy with both colour-difference signals. They are combined in a complex way. The B'-Y' signal is used to modulate one signal at 4.43 MHz, and the other, R'-Y' to modulate another signal at 4.43 MHz. The latter has a 90 degree phase to the first signal.

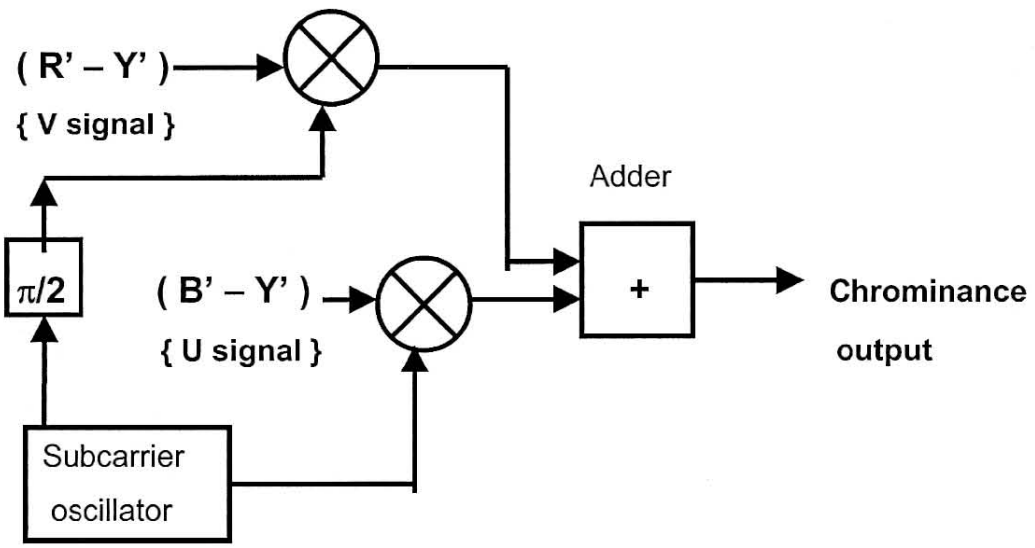

This technique of carrying two signals on the same frequency carrier but with a 90 ° phase shift (1/4 of a cycle delay), is called *Quadrature Amplitude Modulation (QAM)*. It is very effective at saving channels, or bandwidth, but requires information to be sent about both the frequency and phase (timing) of the original U subcarrier. This is the purpose of the *Colour Burst*, which lasts for around 10 cycles at the beginning of each horizontal TV line :-

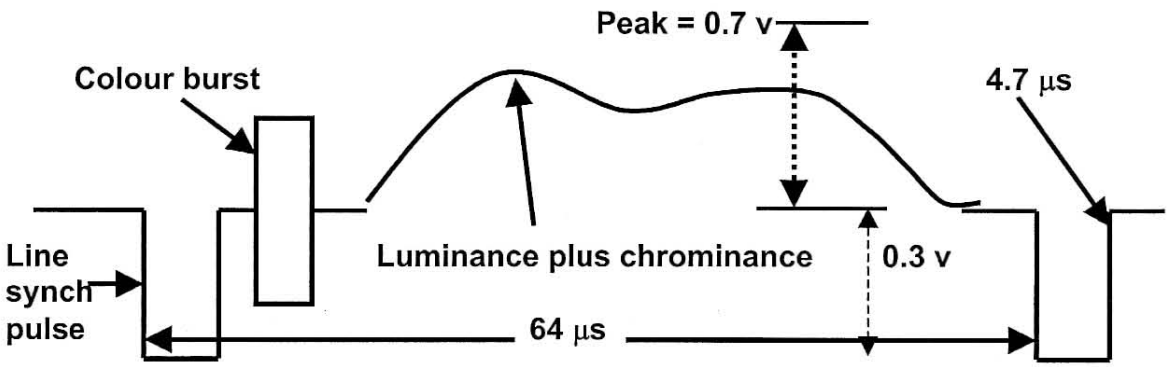

The amplitude of the overall chrominance signal ('A' in the diagram) is related to the Saturation of the colour, whereas the timing, or phase, of the individual sine wave at a point along a line, is related to the Hue. In effect, the two signals produce two components at subcarrier frequency. The amplitude modulation of the subcarrier can be considered as having a U and V component, or $\mathbf{R_c}$ and θ components (in polar coordinates). The magnitude at $\mathbf{R_c}$ is given by : $\mathbf{R_c} = \sqrt{(U^2 + V^2)}$, and the angle θ is given by : $\tan\theta = V/U$.

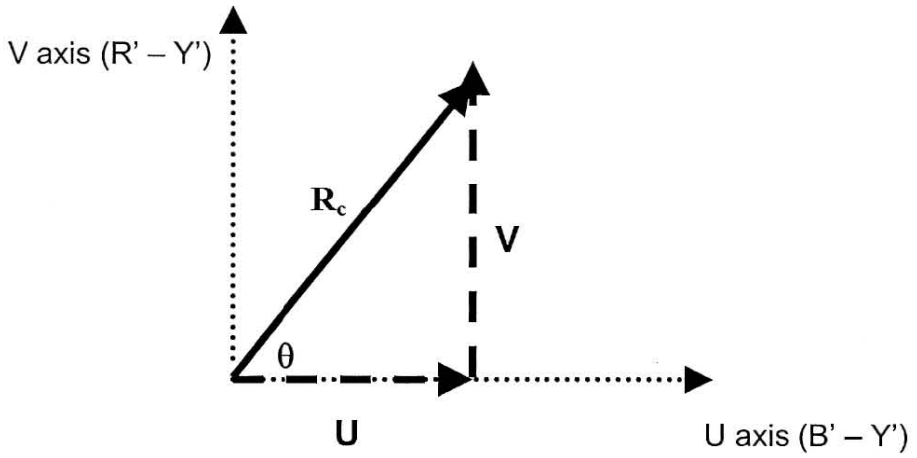

Examples.

For simplicity, let $\gamma = 1$ (i.e. R' = R etc), and let $Y = l_1.R + l_2.G + l_3.B$, where $l_1 = 0.3$, etc. and let U = k1.(B-Y), and V = k2.(R-Y), where k1 = 0.5 and k2 = 0.9, the chrominance weighting coefficients.

[a] A pure Red at 50 % brightness ie. R = 0.5, G = 0, and B = 0

Y = 0.15, (R-Y) = 0.35, and (B-Y) = - 0.15 , so :-

U = 0.5 x (-0.15) = -0.075 and **V** = 0.9 x (0.35) = 0.315

These are the vectors drawn on a vectorscope. The system so far described corresponds to the American NTSC (National Television Standards Committee) approach to chrominance transmission.

On the first TV line, the colour burst (10 cycles at 4.43 MHz just after the line synch pulse) is shifted in phase to **+135** ° away from the U reference axis, the U component itself being left where it is. On the next line, the colour subcarrier burst then takes up an angle of **-135** ° away from the U reference axis, relative to the U axis.

Simultaneously on the second line, the V signal is inverted. Instead of being at +90 ° with respect to the U component, it is at -90 ° with respect to the U component. This means that the V signal is inverted whenever the subcarrier burst phase is -135 ° . At the receiver end the electronics detect the 'swinging burst', and detect the V signal so that it has the correct angle with respect to the U axis. The swinging burst serves to reduce the effect of differential phase errors.

Suppose the phase (ie. angle) error in the TV system is +5 degrees on the V signal on a particular line. *On the next line, the error will again be +5 degrees, but with respect to -V*. This is equivalent to an error of -5 degrees when the (-V) signal is inverted again to become +V. Thus, if the 'V' information on two lines is averaged, then the error for +V will be : +5 degrees plus (-5) degrees, ie. no error. The price paid for this is that now two lines have to be used to obtain the corrected chrominance signal for each displayed line.

The reason why the colour-difference signals are used is as follows. Suppose a monochrome image is transmitted within a colour system. This implies that R = G = B ie. a shade of grey is sent. As example, let R = 0.3 etc. Then the true luminance, $Y = l_1.R + l_2.G + l_3.B = 0.3$, so (R-Y) = 0.3 - 0.3 = 0, and (B-Y) = 0.

Thus, colour-difference signals disappear for monochrome pictures. This is called *monochrome compatibility*. Similarly, a colour TV signal will be interpreted reasonably well by a monochrome receiver, this being *reverse compatibility*. Because no chrominance circuits exist in a monochrome receiver, only the luminance part of the colour TV signal is used.

The presence of the amplitude-modulated subcarrier (ie.the chrominance) artificially raises the brightness, which partially compensates for the fact that the gamma-corrected signals Y', R'-Y', and B'-Y' are actually used instead of Y, R-Y, and B-Y. This effect is beneficial because the actual transmitted luminance signal is less than the true luminance, except for greys and white.

Suppose a Magenta is sent, with the following values of R,G,B :

R = 0.5 G = 0 B = 0.5 , then Y = 0.2

(from $Y = l_1.R + l_2.G + l_3.B$)

However, $Y' = l_1.R' + l_2.G' + l_3.B' = 0.28$ for a gamma of 2.2. When Y' is applied to the monochrome TV tube characteristic, the displayed brightness is proportional to :-

$$(Y')^{\gamma} = (0.28)^{\gamma} = 0.09$$

Therefore, the true luminance is 0.2 and the luminance on a monochrome display is 0.09, less than half the correct value.